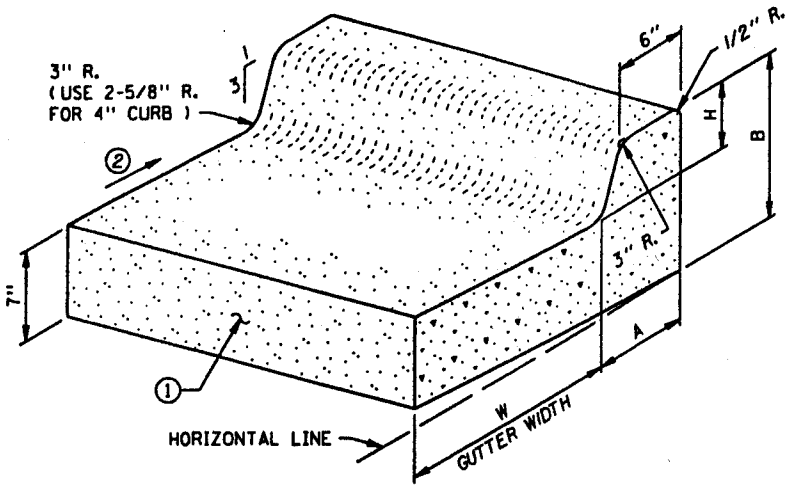

DESIGN B

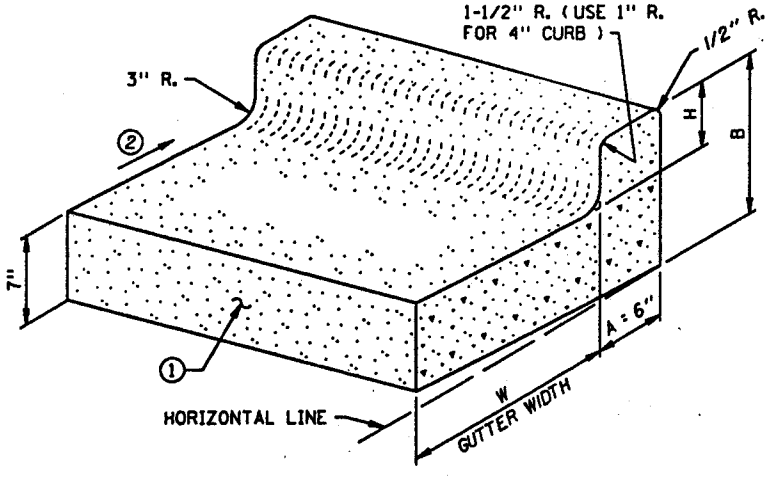

DESIGN V

NOTES:

1. LONGITUDINAL JOINT WHEN ADJACENT TO RIGID PAVEMENT OR BASE.

   SEE STANDARD PLANS MANUAL FOR JOINT INFORMATION.

2. SLOPE 3/4" PER FOOT NORMAL, UNLESS OTHERWISE SPECIFIED. IF A DIFFERENT GUTTER SLOPE IS PERMITTED, THE GUTTER FORM MAY BE TILTED.

DESIGN B			W = 12"			W = 18"			W = 24"			W = 30"			W = 36"		
DIMENSIONS			DESIGN NO.	CONCRETE		DESIGN NO.	CONCRETE		DESIGN NO.	CONCRETE		DESIGN NO.	CONCRETE		DESIGN NO.	CONCRETE	
H	A	B		CU. YDS. PER LIN. FT.	LIN. FT. PER CU. YD.		CU. YDS. PER LIN. FT.	LIN. FT. PER CU. YD.		CU. YDS. PER LIN. FT.	LIN. FT. PER CU. YD.		CU. YDS. PER LIN. FT.	LIN. FT. PER CU. YD.		CU. YDS. PER LIN. FT.	LIN. FT. PER CU. YD.
4	7-3/8"	11-1/2"	B412	0.0421	23.8	B418	0.0529	18.9	B424	0.0637	15.7	B430	0.0745	13.4	B436	0.0853	11.7
6	8"	13-1/2"	B612	0.0474	21.1	B618	0.0582	17.2	B624	0.0690	14.5	B630	0.0798	12.5	B636	0.0906	11.0
8	8-5/8"	15-1/2"	B812	0.0529	18.9	B818	0.0637	15.7	B824	0.0745	13.4	B830	0.0853	11.7	B836	0.0962	10.4
9	9"	16-5/8"	B912	0.0559	17.9	B918	0.0667	15.0	B924	0.0775	12.9	B930	0.0883	11.3	B936	0.0991	10.1
10	9-3/8"	17-5/8"	B1012	0.0589	17.0	B1018	0.0697	14.4	B1024	0.0805	12.4	B1030	0.0913	11.0	B1036	0.1021	9.8

DESIGN V			W = 12"			W = 18"			W = 24"			W = 30"			W = 36"		
DIMENSIONS			DESIGN NO.	CONCRETE		DESIGN NO.	CONCRETE		DESIGN NO.	CONCRETE		DESIGN NO.	CONCRETE		DESIGN NO.	CONCRETE	
H	A	B		CU. YDS. PER LIN. FT.	LIN. FT. PER CU. YD.		CU. YDS. PER LIN. FT.	LIN. FT. PER CU. YD.		CU. YDS. PER LIN. FT.	LIN. FT. PER CU. YD.		CU. YDS. PER LIN. FT.	LIN. FT. PER CU. YD.		CU. YDS. PER LIN. FT.	LIN. FT. PER CU. YD.
4	6"	11-3/8"	V412	0.0396	25.3	V418	0.0504	19.9	V424	0.0612	16.4	V430	0.0720	13.9	V436	0.0828	12.1
6	6"	13-3/8"	V612	0.0426	23.5	V618	0.0534	18.7	V624	0.0642	15.6	V630	0.0750	13.4	V636	0.0858	11.7
8	6"	15-3/8"	V812	0.0457	21.9	V818	0.0565	17.7	V824	0.0673	14.9	V830	0.0781	12.8	V836	0.0889	11.3
9	6"	16-3/8"	V912	0.0472	21.2	V918	0.0580	17.2	V924	0.0688	14.5	V930	0.0796	12.6	V936	0.0904	11.1
10	6"	17-3/8"	V1012	0.0487	20.5	V1018	0.0595	16.8	V1024	0.0703	14.2	V1030	0.0811	12.4	V1036	0.0919	10.9

APPROVED March 11, 1994	STATE OF MINNESOTA DEPARTMENT OF TRANSPORTATION	SPECIFICATION REFERENCE	STANDARD PLATE NO.
R.H. Cartford ACTING STATE DESIGN ENGINEER	CONCRETE CURB AND GUTTER DESIGN B AND DESIGN V	2531	7100G