PORT AUTHORITY
WINONA™
MINNESOTA

207 Lafayette Street
P.O. Box 378
Winona, MN 55987-0378
(507) 457-8250
www.portofwinona.com

Mile 725 Upper Mississippi

AGENDA

DATE: **August 12, 2020**

TIME: **4:00 P.M.**

PLACE: **Via Zoom (See Attached Notes)**

1. **CALL TO ORDER - APPROVAL OF MINUTES**
   Approval of the minutes from the July 9, 2020 Meeting

2. **REMARKS BY PRESIDENT**

3. **NEW BUSINESS**
   A. Recommended 2021 Port Authority Budget (Attached: Budget Documents)
   Commissioners will review the recommended 2021 Port Authority budgets and proposed levy. If Commissioners concur with the recommended budgets, staff requests the following actions to be taken:

   - Approval of the recommended property tax levy for fund 936 along with the recommendation to City Council to favorably review the proposed levy
   - Approve the recommended tax levy for Fund 911
   - Approve, by motion, the 2021 Port Authority budgets including all attached funds and recommending approval of budgets by City Council

4. **FINANCIAL REPORTS**

5. **ADJOURNMENT**

Zoom Procedures for Port Authority Meeting
Wednesday, August 12, 2020 at 4:00 pm
Council Chambers, Winona City Hall

All interested parties are invited to participate via electronic means. This meeting is open to the public via web or phone. This meeting begins at 4:00 pm; please log in prior to the start of the meeting. You may exit the meeting at any time.

Port Authority Commissioners and Staff:

- To join the Zoom Meeting via web, go to: https://zoom.us/j/252527617
  and enter Meeting ID: 252 527 617

- To join via phone, dial phone number:

  +1 312 626 6799 US (Chicago)

  When prompted, enter the following Meeting ID: 252 527 617
  Then enter your participant ID if you have one; if not, enter #

For participants:

- Only use one audio source; audio from computer is preferred if available.
- Be aware of background noise from your location.
- If using phone, do not use the speaker function.
- If using a web cam, be aware of what is in your background.
- If you have headphones, please use them as that will limit background noise
- Please mute your audio until you wish to speak. Then unmute your audio, and ask the Chairman for permission to talk.
- If using web access, note the options for you to view the meeting (gallery shows all participants same size)

Other notes:

- Staff will "host" the meeting on a city computer and will manage when participants' audio is muted / unmuted.

- The public hearing notices included the Zoom meeting information, and also indicated that written comments could be submitted to staff by a set date prior to the Port Authority meeting. These written comments will be provided to the Commissioners either in advance or at the public hearing.

PORT AUTHORITY AGENDA ITEM

AGENDA ITEM: **1. Approval of Minutes**

DATE: **August 12, 2020**

Following are the minutes from the July 9, 2020 meetings for Commission's review and approval.

PORT AUTHORITY OF WINONA MINUTES

DATE: July 9, 2020

PRESENT: President Cichanowski, Commissioners: Thurley, Borzyskowski, Gorman, Lucas, Hansen, and Executive Secretary Sarvi

ABSENT: Commissioner Johnson

STAFF PRESENT: Director of Community Development Lucy McMartin, Finance Director Mary Burrichter, Finance Analyst Jessica Wojahn, and Development Coordinator Myron White

1. CALL TO ORDER – APPROVAL OF MINUTES

The meeting was called to order at 4:00 PM by President Cichanowski.

A motion was made by Commissioner Hansen and seconded by Commissioner Thurley to approve the June 11, 2020 minutes. The motion carried with all Commissioners present voting aye.

2. REMARKS BY PRESIDENT

President Cichanowski noted that Finance Director Burrichter had announced her retirement. He thanked Finance Director Burrichter for her service to both the Port Authority and the City of Winona and assured her that her dedication to excellence would be missed.

3. OLD BUSINESS

A. Public Hearing – Sale of Land – Outlot D to Fastenal Company

President Cichanowski opened the public hearing on the sale of Outlot "D" to Fastenal Company. Director of Community Development McMartin explained a public hearing is required by statute for the sale of Port Authority property. Director McMartin referenced a map and legal description of the subject property along with the proposed purchase agreement and supporting documentation.

President Cichanowski asked if anyone from the public would like to comment on the proposed sale. He asked a second and a third time, hearing no comments President Cichanowski asked for a motion to close the public hearing. Commissioner Borzyskowski made a motion to close the public hearing; it was seconded by Commissioner Lucas. All commissioners present voted aye.

Commissioner Borzyskowski made a motion to approve the proposed resolution on the sale of Outlot D to Fastenal Company. The motion was seconded by Commissioner Lucas with all members present voting aye.

4. NEW BUSINESS

A. Winona Main Street Update

Ben Strand, Program Director of Main Street Winona, provided an overview of Main Street activities. Like most entities, Main Street and their community events have been impacted by COVID. Main Street was forced to cancel both their Big Muddy

and Touch a Truck event. Both are popular events and both help to raise funds for Main Street activities. Events and projects that were able to take place:

- Expansion of the Friends of Main Street Program
- Dine Out Downtown
- Passport Program (100-120 participants)
- Work with Winona Fine Arts
- Work with RETHOS
- Assistance with Port Authority & City of Winona Revolving Loan Funds
- Input on Downtown Strategic Plan

Update only, no action required.

B. *Emergency Loan Update*

Director of Community Development McMartin provided an update on the Covid Emergency Loan Program. She indicated that demand for the Tier 2 loans (those between $6,000 and $20,000) has been greater than demand for Tier 1 loans (between $1,000 and $6,000). Currently, the balance in the Tier 1 loan fund is $74,000 while the Tier 2 loan fund has been exhausted. Director McMartin asked if Commissioners would support using the remaining $74,000 in loan funds for both Tier 1 and Tier 2 loans.

Commissioner Thurley asked how we intended to market the remaining loan funds. Director McMartin indicated in the part, press releases, web sites and social media had been effective and we would continue with those outlets.

A motion was made by Commissioner Hansen and seconded by Commissioner Lucas to the consolidation of the two loan programs. The motion passed with all Commissioners present voting aye.

5. FINANCIAL REPORTS

Finance Director Burrichter provided an overview of financials and indicated, despite the option to delay property tax payments; roughly 95% of the taxes had been collected. She also presented Winona County Sales & Use Tax Collections.

6. ADJOURNMENT

The meeting was adjourned at 4:27 pm.

Myron White
Development Coordinator

Michael Cichanowski
President

PORT AUTHORITY AGENDA ITEM

AGENDA ITEM:	**3. A. Recommended 2021 Port Authority Budget**
DATE:	**August 12, 2020**
ATTACHMENT:	**2021 Recommended Port Authority Budgets** **Letter from Flaherty & Hood, P.A.**

Attached are the 2021 Recommended Budgets. All funds related to economic development activities and responsibilities are included. The attached sheet titled "Recommended Budget and Recommended Levy for 2021" summarizes the Port Authority funds.

The Port Authority Commissioners are requested to review the attached budgets. The City Council has final approval of the budget and levy. The Commercial Harbor Fund 945 includes funds for the Minnesota Port Assistance Fund projects in the Commercial Harbor including a steel sheet pile wall at 998 Riverview Drive. If the Commissioners concur with the budgets, the following actions should be taken:

1. Approve the recommended property tax levy for Fund 936, the Airport Improvement Bonds, and recommend that the City Council approve the tax levy for this project. The City Council has final approval for this tax levy request.
2. Approve the recommended property tax levy for Fund 911, Port Authority General Fund.
3. Approve, by motion, the 2021 Port Authority budgets including all attached funds and recommending approval of such by the City Council.

PORT AUTHORITY OF WINONA

RECOMMENDED BUDGET & RECOMMENDED LEVY (PRELIMINARY)- FOR 2021 (AMOUNTS IN $)

FUND#	FUND NAME (PORT AUTHORITY="PT")	REVENUES & OTHER SOURCES TAX LEVY	OTHER	(UNFUNDED)	REVENUES & OTR SRCS	EXPEND. & OTHER USES
	TOTAL PORT AUTHORITY:					
	Special Revenue Funds-Port:					
911	PT-Port Authority General	334,240	567,304	-	901,544	901,544
921	PT-Federal Revolving Loan		75,000	-	75,000	75,000
922	PT-Revolving Loan (Not Federal)		157,500	-	157,500	157,500
923	PT-Local Econ Development		50,000	-	50,000	50,000
	Debt Service Funds- Port:					
931	PT-2015 Refd '05 Pelzer GO Bond	-	-	-	-	-
936	PT-2013 Airport Improvement Bond	134,760	100	-	134,860	134,860
	Capital Projects Funds-Port:					
945	PT-Commercial Harbor		626,500	-	626,500	626,500
946	PT-Riverbend Brownfields		55,000	-	55,000	55,000
948	PT-TIF Innovation Drive		114,000	-	114,000	114,000
949	PT-TIF 102 Walnut		15,000	-	15,000	15,000
950	PT-TIF 956 Mankato		70,000	-	70,000	70,000
	TOTAL PORT AUTHORITY FUNDS	469,000	1,730,404	-	2,199,404	2,199,404

2021 PAYABLE -PORT AUTHORITY (COMPARISON TO 2020 & 2019)
DEPARTMENT RECOMMENDED (PRELIMINARY) BUDGET

Fund #	FUND	2021 RECOMMENDED (PRELIMINARY) NET LEVY	2020 NET LEVY	2019 NET LEVY
	PORT AUTHORITY:			
	General & Debt:			
911	Port - General	334,240	343,000	169,000
931	Port - Pelzer St 2015A Refund 2005 GO Bond	-	-	288,500
936	Port - 2013A Airport Improvements Bond	134,760	131,800	128,500
	TOTAL PORT LEVY	469,000	474,800	586,000

911-PORT AUTHORITY-GENERAL

REVENUES	2019 ACTUAL	2020 ORIGINAL	2020 AMENDED	2021 DEPARTMENT REQUESTED	2021 RECOMMENDED BUDGET	2021 PROPOSED BUDGET	2021 ADOPTED BUDGET
TAXES							
GENERAL PROPERTY TAXES							
911-31110 CURRENT AD VALOREM TAXES	164,982	343,000	343,000	354,240	334,240		
PROPERTY TAX-469.53, SUBD 4	0	0.00	334,240.00				
911-31120 DELINQUENT AD VALOREM TAXES	1,804	0	0	0	0		
TOTAL GENERAL PROPERTY TAXES	166,786	343,000	343,000	354,240	334,240		
TOTAL TAXES	166,786	343,000	343,000	354,240	334,240		
INTERGOVERNMENTAL REV							
FEDERAL GRANTS							
911-33101 FEDERAL GRANTS-RESTRICT PRM	0	0	0	0	0		
TOTAL FEDERAL GRANTS	0	0	0	0	0		
STATE GRANTS & AIDS							
911-33402 MARKET VALUE CREDITS	30	0	0	0	0		
911-33408 STATE GRANT-RESTRICTED	0	0	0	0	0		
TOTAL STATE GRANTS & AIDS	30	0	0	0	0		
TOTAL INTERGOVERNMENTAL REV	30	0	0	0	0		
CHARGES FOR SERVICES							
CHGS/SERV-GENERAL GOVT							
911-34111 DEBT ADMIN FEES	9,201	8,000	8,000	7,000	7,000		
CONDUIT FEES	0	0.00	7,000.00				
TOTAL CHGS/SERV-GENERAL GOVT	9,201	8,000	8,000	7,000	7,000		
TOTAL CHARGES FOR SERVICES	9,201	8,000	8,000	7,000	7,000		
MISCELLANEOUS REVENUE							
INVESTMENT EARNINGS							
911-36101 INTEREST REVENUES	36,441	500	500	1,000	1,000		
EST. INTEREST REVENUE	0	0.00	1,000.00				
TOTAL INVESTMENT EARNINGS	36,441	500	500	1,000	1,000		
RENTS							
911-36209 RENTS-OTHER	209,557	196,130	196,130	178,130	178,130		
ARTCO	0	0.00	130,000.00				
SHORTRIDGE	0	0.00	100.00				
BOATHOUSE	0	0.00	6,000.00				
102 WALNUT	0	0.00	2,000.00				

911-PORT AUTHORITY-GENERAL

REVENUES	2019 ACTUAL	2020 ORIGINAL	2020 AMENDED	2021 DEPARTMENT REQUESTED	2021 RECOMMENDED BUDGET	2021 PROPOSED BUDGET	2021 ADOPTED BUDGET
CHS	0	0.00 39,000.00					
LATSCH BUILDING PARTNERSHIP	0	0.00 1,030.00					
TOTAL RENTS	209,557	196,130	196,130	178,130	178,130		
MISCELLANEOUS REVENUES							
911-36302 UNLOADING FEES	242,599	200,000	200,000	220,000	220,000		
CD CORPORATION	0	0.00 220,000.00					
911-36303 LOAN REPAYMENT	0	0	0	0	0		
911-36304 SALE OF ASSETS	210,000	0	0	0	0		
911-36329 REFUNDS/REIMBURSEMENTS-OTHER	9,069	5,000	5,000	0	0		
TOTAL MISCELLANEOUS REVENUES	461,668	205,000	205,000	220,000	220,000		
TOTAL MISCELLANEOUS REVENUE	707,666	401,630	401,630	399,130	399,130		
OTHER FINANCING SOURCES							
INTERFUND TRANSFERS IN							
911-39109 TRANSFERS-IN FROM OTHER FUND	11,162	0	0	0	0		
TOTAL INTERFUND TRANSFERS IN	11,162	0	0	0	0		
CAPTL ASSET DISPOSITION							
911-39203 GAIN (LOSS)-DEVELOP. PROPERT	0	0	0	0	0		
TOTAL CAPTL ASSET DISPOSITION	0	0	0	0	0		
RESERVED SOURCES							
911-39810 RESERVED SOURCES (BUDGET ONL	0	0	0	161,174	161,174		
RESERVED SOURCES	0	0.00 161,174.00					
TOTAL RESERVED SOURCES	0	0	0	161,174	161,174		
TOTAL OTHER FINANCING SOURCES	11,162	0	0	161,174	161,174		
TOTAL REVENUES	894,846	752,630	752,630	921,544	901,544		

911-PORT AUTHORITY-GENERAL

REVENUES	2019 ACTUAL		2020 ORIGINAL	2020 AMENDED	2021 DEPARTMENT REQUESTED	2021 RECOMMENDED BUDGET	2021 PROPOSED BUDGET	2021 ADOPTED BUDGET
ECONOMIC DEVELOPMENT								
PROFESSIONAL SERVICES								
911-46511-3301 AUDITING & ACCOUNTING SER	23,221		40,000	40,000	40,000	40,000		
AUDIT SHARE & REPORT	0	0.00	40,000.00					
911-46511-3303 ENGINEERING SERVICES	12,600		15,000	18,400	50,000	50,000		
STREETS	0	0.00	50,000.00					
911-46511-3304 LEGAL SERVICES	5,047		20,000	20,000	20,000	20,000		
LEGAL SERVICES	0	0.00	20,000.00					
911-46511-3309 OTHER PROFESSIONAL SERVIC	60,529		80,000	80,000	72,000	72,000		
MAIN STREET	0	0.00	30,000.00					
PROFESSIONAL SERVICES	0	0.00	35,000.00					
GARAGE CO-WORK SPACE	0	0.00	7,000.00					
911-46511-3404 CITY ADMIN SERVICES	266,242		297,958	297,958	315,175	315,175		
REIMB.CD EXP. (75%) 101-46512	0	0.00	246,860.00					
CITY MANAGER (25%) (FUND 101)	0	0.00	48,927.00					
FINANCE DIRECTOR(10%)(FUND101)	0	0.00	13,439.00					
CITY ENGINEER (5%)(FUND 101)	0	0.00	5,949.00					
TOTAL PROFESSIONAL SERVICES	367,639		452,958	456,358	497,175	497,175		
PROPERTY SERVICES								
911-46511-4102 STORM SEWER	326		100	100	200	200		
STORM SEWER	0	0.00	200.00					
911-46511-4401 RENTAL OF LAND & BUILDING	8,766		9,200	9,200	9,200	9,200		
CORP OF ENGINEERS-COMMERCIAL	0	0.00	6,200.00					
GARAGE CO-WORK	0	0.00	3,000.00					
TOTAL PROPERTY SERVICES	9,092		9,300	9,300	9,400	9,400		
OTHER PURCHASED SERVICES								
911-46511-5201 MUNICIPAL LIABILITY	2,164		2,273	2,273	1,893	1,893		
MUNICIPAL LIABILITY	0	0.00	1,893.00					
911-46511-5202 PROPERTY INSURANCE	4,364		4,493	4,493	5,169	5,169		
PROPERTY INSURANCE	0	0.00	5,169.00					
911-46511-5204 MOBILE PROPERTY INSURANCE	0		0	0	0	0		
911-46511-5207 BOND & FAITHFUL PERFORMAN	32		32	32	24	24		
BONDS	0	0.00	24.00					
911-46511-5208 BOILER COVERAGE INSURANCE	560		578	578	633	633		
BOILER CONVERAGE INSURANCE	0	0.00	633.00					
911-46511-5211 EXCESS LIABILITY	0		500	500	500	500		
EXCESS LIABILITY	0	0.00	500.00					
911-46511-5302 POSTAGE	145		300	300	300	300		
POSTAGE	0	0.00	300.00					
911-46511-5509 PRINTING & BINDING-OTHER	91		300	300	300	300		
PRINTING & BINDING	0	0.00	300.00					
911-46511-5809 EDUCATION & TRAVEL	1,558		3,000	3,000	2,500	2,500		

911-PORT AUTHORITY-GENERAL

DEPARTMENTAL EXPENDITURES	2019 ACTUAL	2020 ORIGINAL	2020 AMENDED	2021 DEPARTMENT REQUESTED	2021 RECOMMENDED BUDGET	2021 PROPOSED BUDGET	2021 ADOPTED BUDGET
EDUCATION & TRAVEL	0	0.00	2,500.00				
911-46511-5902 MEMBERSHIPS & SUBSCRIPTIO	9,303	9,250	9,250	9,650	9,650		
UPPER MISSISSIPPI WATERWAYS	0	0.00	100.00				
SEVEN RIVERS	0	0.00	150.00				
WINONA CHAMBER OF COMMERCE	0	0.00	200.00				
MINNESOTA PORTS ASSOCIATION	0	0.00	6,500.00				
GMEDP	0	0.00	2,700.00				
911-46511-5903 REFUNDS & REIMBURSEMENTS	9,708	0	0	0	0		
911-46511-5905 PROVISION FOR DEBT	0	0	0	0	0		
911-46511-5909 PURCHASED SERVICES-OTHER	77,407	85,000	85,000	80,000	80,000		
PROPERTY TAXES	0	0.00	70,000.00				
OTHER SERVICES	0	0.00	10,000.00				
TOTAL OTHER PURCHASED SERVICES	105,332	105,726	105,726	100,969	100,969		
PROPERTY							
911-46511-7109 LAND	0	0	0	0	0		
911-46511-7309 IMPROVEMENT OTHER THAN BL	0	0	0	0	0		
911-46511-7931 CAPITAL EXPEND-DEVELOP PR	0	0	0	170,000	150,000		
DEVELOPMENT FUND	0	0.00	150,000.00				
TOTAL PROPERTY	0	0	0	170,000	150,000		
MISCELLANEOUS							
911-46511-8004 LOSS ON SALE-DEVELOP PROP	0	0	0	0	0		
TOTAL MISCELLANEOUS	0	0	0	0	0		
TOTAL ECONOMIC DEVELOPMENT	482,063	567,984	571,384	777,544	757,544		
OTHER INTRFND TRANSF OUT							
MISCELLANEOUS							
911-49109-8029 TRANSFERS-OUT	212,000	122,000	122,000	144,000	144,000		
TO FUND 945-COMMERCIAL HARB	0	0.00	139,000.00				
TO FUND 946 RIVERBEND	0	0.00	5,000.00				
TOTAL MISCELLANEOUS	212,000	122,000	122,000	144,000	144,000		
TOTAL OTHER INTRFND TRANSF OUT	212,000	122,000	122,000	144,000	144,000		
RESERVED USES-BUDGET							

911-PORT AUTHORITY-GENERAL

DEPARTMENTAL EXPENDITURES	2019 ACTUAL	2020 ORIGINAL	2020 AMENDED	2021 DEPARTMENT REQUESTED	2021 RECOMMENDED BUDGET	2021 PROPOSED BUDGET	2021 ADOPTED BUDGET
MISCELLANEOUS							
911-49990-8100 RESERVED USES-BUDGET	0	62,646	62,646	0	0		
TOTAL MISCELLANEOUS	0	62,646	62,646	0	0		
TOTAL RESERVED USES-BUDGET	0	62,646	62,646	0	0		
TOTAL EXPENDITURES	694,063	752,630	756,030	921,544	901,544		
REVENUE OVER/(UNDER) EXPENDITURES	200,783	0	(3,400)	0	0		

*** END OF REPORT ***

921-FEDERAL REVOLVING LOAN

REVENUES	2019 ACTUAL	2020 ORIGINAL	2020 AMENDED	2021 DEPARTMENT REQUESTED	2021 RECOMMENDED BUDGET	2021 PROPOSED BUDGET	2021 ADOPTED BUDGET
MISCELLANEOUS REVENUE							
INVESTMENT EARNINGS							
921-36101 INTEREST REVENUES	8,161	0	0	0	0		
TOTAL INVESTMENT EARNINGS	8,161	0	0	0	0		
MISCELLANEOUS REVENUES							
921-36309 OTHER REVENUES	0	0	0	0	0		
921-36328 LOAN OPEN RIVER PRESS	0	0	0	0	0		
921-36331 LOAN STRUCTURED HOLDINGS	68,371	0	0	0	0		
921-36332 LOAN SAWDUST FACTORY	0	0	0	0	0		
921-36333 LOAN QUALITY SHEET METAL	0	0	0	0	0		
921-36334 LOAN BENO'S	0	0	0	0	0		
921-36335 LOAN ORC	0	0	0	0	0		
921-36336 OMNI ENGINEERING SERVICES	0	0	0	0	0		
921-36337 LOAN - EFS	0	0	0	0	0		
921-36338 LOAN METRO PLAINS	0	0	0	10,000	10,000		
LOAN METRO PLAINS	0	0.00	10,000.00				
TOTAL MISCELLANEOUS REVENUES	68,371	0	0	10,000	10,000		
TOTAL MISCELLANEOUS REVENUE	76,532	0	0	10,000	10,000		
OTHER FINANCING SOURCES							
RESERVED SOURCES							
921-39810 RESERVED SOURCES (BUDGET ONL	0	75,000	75,000	65,000	65,000		
USE OF RESERVES	0	0.00	65,000.00				
TOTAL RESERVED SOURCES	0	75,000	75,000	65,000	65,000		
TOTAL OTHER FINANCING SOURCES	0	75,000	75,000	65,000	65,000		
TOTAL REVENUES	76,532	75,000	75,000	75,000	75,000		

921-FEDERAL REVOLVING LOAN

REVENUES	2019 ACTUAL	2020 ORIGINAL	2020 AMENDED	2021 DEPARTMENT REQUESTED	2021 RECOMMENDED BUDGET	2021 PROPOSED BUDGET	2021 ADOPTED BUDGET
COMMUNITY DEVELOPMENT							
OTHER PURCHASED SERVICES							
921-46512-5903 REFUNDS & REIMBURSEMENTS	0	0	0	0	0		
TOTAL OTHER PURCHASED SERVICES	0	0	0	0	0		
MISCELLANEOUS							
921-46512-8002 LOANS	0	75,000	75,000	75,000	75,000		
PROJECTED NEW LOANS	0	0.00	75,000.00				
TOTAL MISCELLANEOUS	0	75,000	75,000	75,000	75,000		
TOTAL COMMUNITY DEVELOPMENT	0	75,000	75,000	75,000	75,000		
TRANSFERS							
MISCELLANEOUS							
921-49109-8029 TRANSFER-OUT	0	0	0	0	0		
TOTAL MISCELLANEOUS	0	0	0	0	0		
TOTAL TRANSFERS	0	0	0	0	0		
TOTAL EXPENDITURES	0	75,000	75,000	75,000	75,000		
REVENUE OVER/(UNDER) EXPENDITURES	76,532	0	0	0	0		

*** END OF REPORT ***

922-REVOLVING LOAN (NON-FED)

REVENUES	2019 ACTUAL	2020 ORIGINAL	2020 AMENDED	2021 DEPARTMENT REQUESTED	2021 RECOMMENDED BUDGET	2021 PROPOSED BUDGET	2021 ADOPTED BUDGET
INTERGOVERNMENTAL REV							
STATE GRANTS & AIDS							
922-33408 STATE GRANT/AID-RESTRICT PRG	0	0	0	0	0		
TOTAL STATE GRANTS & AIDS	0	0	0	0	0		
LOCAL GOVT GRANTS							
922-33702 COUNTY GRANTS-OTHER	0	0	0	0	0		
TOTAL LOCAL GOVT GRANTS	0	0	0	0	0		
TOTAL INTERGOVERNMENTAL REV	0	0	0	0	0		
MISCELLANEOUS REVENUE							
INVESTMENT EARNINGS							
922-36101 INTEREST REVENUES	2,541	0	0	0	0		
TOTAL INVESTMENT EARNINGS	2,541	0	0	0	0		
MISCELLANEOUS REVENUES							
922-36327 LOAN CHAFFIN PROPERTIES	5,359	5,000	5,000	4,991	4,991		
CHAFFIN PROPERTIES LOAN	0	0.00	4,991.00				
922-36334 LOAN CYTEC	0	0	0	0	0		
922-36339 FLOOD LOANS	0	0	0	0	0		
922-36344 LOAN CYTEC	0	0	0	0	0		
922-36345 LOAN LATSCH BUILDING PRS	8,691	8,691	8,691	8,690	8,690		
LOAN LATSCH BUILDING PARTNERS	0	0.00	8,690.00				
922-36346 LOAN INFINITY CHIROPRACTIC	5,645	5,678	5,678	5,677	5,677		
LOAN INFINITY CHIROPRACTIC	0	0.00	5,677.00				
922-36347 BENEFL REUSE MGMT/GYPSOIL	73,070	79,698	79,698	79,456	79,456		
GYPSOIL LOAN	0	0.00	22,198.00				
GYPSOIL MIF LOAN	0	0.00	57,258.00				
922-36349 LOAN REPAYMENT	22,644	23,425	23,425	30,000	30,000		
LOAN REPAYMENT	0	0.00	30,000.00				
TOTAL MISCELLANEOUS REVENUES	115,408	122,492	122,492	128,814	128,814		
TOTAL MISCELLANEOUS REVENUE	117,949	122,492	122,492	128,814	128,814		
OTHER FINANCING SOURCES							
RESERVED SOURCES							
922-39810 RESERVED SOURCES-BUDGET ONLY	0	35,008	35,008	28,686	28,686		
USE OF RESERVES	0	0.00	28,686.00				
TOTAL RESERVED SOURCES	0	35,008	35,008	28,686	28,686		
TOTAL OTHER FINANCING SOURCES	0	35,008	35,008	28,686	28,686		
TOTAL REVENUES	117,949	157,500	157,500	157,500	157,500		

922-REVOLVING LOAN (NON-FED)

REVENUES	2019 ACTUAL	2020 ORIGINAL	2020 AMENDED	2021 DEPARTMENT REQUESTED	2021 RECOMMENDED BUDGET	2021 PROPOSED BUDGET	2021 ADOPTED BUDGET
COMMUNITY DEVELOPMENT							
OTHER PURCHASED SERVICES							
922-46512-5903 REFUNDS & REIMBURSEMENTS	50,871	57,500	57,500	57,500	57,500		
REFUNDS & REIMBURSEMENTS	0	0.00	57,500.00				
TOTAL OTHER PURCHASED SERVICES	50,871	57,500	57,500	57,500	57,500		
MISCELLANEOUS							
922-46512-8002 LOANS	125,000	100,000	100,000	100,000	100,000		
PROJECTED NEW LOANS	0	0.00	0.00				
	0	0.00	100,000.00				
922-46512-8003 EMERGENCY LOANS-FLOOD	0	0	0	0	0		
TOTAL MISCELLANEOUS	125,000	100,000	100,000	100,000	100,000		
TOTAL COMMUNITY DEVELOPMENT	175,871	157,500	157,500	157,500	157,500		
INTERFUND TRANSFER OUT							
MISCELLANEOUS							
922-49109-8029 TRANSFERS-OUT	0	0	0	0	0		
TOTAL MISCELLANEOUS	0	0	0	0	0		
TOTAL INTERFUND TRANSFER OUT	0	0	0	0	0		
RESERVED USES(BUDGET ONL							
MISCELLANEOUS							
922-49990-8100 RESERVED USES-BUDGET ONLY	0	0	0	0	0		
TOTAL MISCELLANEOUS	0	0	0	0	0		
TOTAL RESERVED USES(BUDGET ONL	0	0	0	0	0		
TOTAL EXPENDITURES	175,871	157,500	157,500	157,500	157,500		

922-REVOLVING LOAN (NON-FED)

DEPARTMENTAL EXPENDITURES	2019 ACTUAL	2020 ORIGINAL	2020 AMENDED	2021 DEPARTMENT REQUESTED	2021 RECOMMENDED BUDGET	2021 PROPOSED BUDGET	2021 ADOPTED BUDGET
REVENUE OVER/(UNDER) EXPENDITURES	(57,923)	0	0	0	0		

*** END OF REPORT ***

923-LOCAL ECON DEV FUND

REVENUES	2019 ACTUAL	2020 ORIGINAL	2020 AMENDED	2021 DEPARTMENT REQUESTED	2021 RECOMMENDED BUDGET	2021 PROPOSED BUDGET	2021 ADOPTED BUDGET
MISCELLANEOUS REVENUE							
INVESTMENT EARNINGS							
923-36101 INTEREST REVENUES	3,354	0	0	0	0		
TOTAL INVESTMENT EARNINGS	3,354	0	0	0	0		
MISCELLANEOUS REVENUES							
923-36349 LOAN REPAYMENT	0	2,660	2,660	27,400	27,400		
LOAN REPAYMENT	0	0.00	27,400.00				
TOTAL MISCELLANEOUS REVENUES	0	2,660	2,660	27,400	27,400		
CONTRIBUTION & DONATIONS							
923-36401 CONTRIB/DONATIONS-PRIVATE SR	0	0	0	0	0		
TOTAL CONTRIBUTION & DONATIONS	0	0	0	0	0		
TOTAL MISCELLANEOUS REVENUE	3,354	2,660	2,660	27,400	27,400		
OTHER FINANCING SOURCES							
INTERFUND TRANSFERS IN							
923-39109 TRANSFERS-IN FROM OTHER FUND	0	0	0	0	0		
TOTAL INTERFUND TRANSFERS IN	0	0	0	0	0		
RESERVED SOURCES							
923-39810 RESERVED SOURCES-BUDGET ONLY	0	37,340	37,340	22,600	22,600		
RESERVED SOURCES-BUDGET ONLY	0	0.00	22,600.00				
TOTAL RESERVED SOURCES	0	37,340	37,340	22,600	22,600		
TOTAL OTHER FINANCING SOURCES	0	37,340	37,340	22,600	22,600		
TOTAL REVENUES	3,354	40,000	40,000	50,000	50,000		

923-LOCAL ECON DEV FUND

REVENUES	2019 ACTUAL	2020 ORIGINAL	2020 AMENDED	2021 DEPARTMENT REQUESTED	2021 RECOMMENDED BUDGET	2021 PROPOSED BUDGET	2021 ADOPTED BUDGET
COMMUNITY DEVELOPMENT							
OTHER PURCHASED SERVICES							
923-46512-5903 REFUNDS & REIMBURSEMENTS	0	0	0	0	0		
TOTAL OTHER PURCHASED SERVICES	0	0	0	0	0		
MISCELLANEOUS							
923-46512-8002 LOANS	0	40,000	40,000	50,000	50,000		
LOANS	0	0.00	50,000.00				
923-46512-8003 EMERGENCY LOANS	0	0	0	0	0		
TOTAL MISCELLANEOUS	0	40,000	40,000	50,000	50,000		
TOTAL COMMUNITY DEVELOPMENT	0	40,000	40,000	50,000	50,000		
OTHER INTRFND TRANSF OUT							
MISCELLANEOUS							
923-49109-8029 TRANSFERS-OUT	0	0	0	0	0		
TOTAL MISCELLANEOUS	0	0	0	0	0		
TOTAL OTHER INTRFND TRANSF OUT	0	0	0	0	0		
TOTAL EXPENDITURES	0	40,000	40,000	50,000	50,000		
REVENUE OVER/(UNDER) EXPENDITURES	3,354	0	0	0	0		

*** END OF REPORT ***

931-PORT BONDS

REVENUES	2019 ACTUAL	2020 ORIGINAL	2020 AMENDED	2021 DEPARTMENT REQUESTED	2021 RECOMMENDED BUDGET	2021 PROPOSED BUDGET	2021 ADOPTED BUDGET
TAXES							
GENERAL PROPERTY TAXES							
931-31110 CURRENT AD VALOREM TAXES	281,558	0	0	0	0		
931-31120 DELINQUENT AD VALOREM TAXES	4,544	0	0	0	0		
TOTAL GENERAL PROPERTY TAXES	286,102	0	0	0	0		
TOTAL TAXES	286,102	0	0	0	0		
INTERGOVERNMENTAL REV							
STATE GRANTS & AIDS							
931-33402 MARKET VALUE CREDITS	51	0	0	0	0		
TOTAL STATE GRANTS & AIDS	51	0	0	0	0		
LOCAL GOVT IN LIEU OF TX							
931-33901 PAYMENT IN LIEU OF TAXES	2,120	0	0	0	0		
TOTAL LOCAL GOVT IN LIEU OF TX	2,120	0	0	0	0		
TOTAL INTERGOVERNMENTAL REV	2,171	0	0	0	0		
MISCELLANEOUS REVENUE							
INVESTMENT EARNINGS							
931-36101 INTEREST REVENUES	7,737	1,000	1,000	0	0		
TOTAL INVESTMENT EARNINGS	7,737	1,000	1,000	0	0		
TOTAL MISCELLANEOUS REVENUE	7,737	1,000	1,000	0	0		
OTHER FINANCING SOURCES							
GENERAL LT DEBT ISSUED							
931-39350 REFUNDING BONDS ISSUED	0	0	0	0	0		
931-39360 PREMIUM BONDS	0	0	0	0	0		
TOTAL GENERAL LT DEBT ISSUED	0	0	0	0	0		
RESERVED SOURCES							
931-39810 RESERVED SOURCES (BUDGET ONL	0	287,850	287,850	0	0		
TOTAL RESERVED SOURCES	0	287,850	287,850	0	0		
TOTAL OTHER FINANCING SOURCES	0	287,850	287,850	0	0		
TOTAL REVENUES	296,011	288,850	288,850	0	0		

931-PORT BONDS

REVENUES	2019 ACTUAL	2020 ORIGINAL	2020 AMENDED	2021 DEPARTMENT REQUESTED	2021 RECOMMENDED BUDGET	2021 PROPOSED BUDGET	2021 ADOPTED BUDGET
BOND PRINCIPAL							
MISCELLANEOUS							
931-47110-8011 PRINCIPAL	280,000	285,000	285,000	0	0		
TOTAL MISCELLANEOUS	280,000	285,000	285,000	0	0		
TOTAL BOND PRINCIPAL	280,000	285,000	285,000	0	0		
INTEREST - BONDS							
MISCELLANEOUS							
931-47210-8011 PRINCIPAL	0	0	0	0	0		
931-47210-8012 INTEREST	8,500	2,850	2,850	0	0		
TOTAL MISCELLANEOUS	8,500	2,850	2,850	0	0		
TOTAL INTEREST - BONDS	8,500	2,850	2,850	0	0		
FISCAL AGENT'S FEES							
MISCELLANEOUS							
931-47500-8019 DEBT SERVICE-OTHER	1,475	1,000	1,000	0	0		
TOTAL MISCELLANEOUS	1,475	1,000	1,000	0	0		
TOTAL FISCAL AGENT'S FEES	1,475	1,000	1,000	0	0		
DISCOUNT ON BONDS ISSUED							
MISCELLANEOUS							
931-49301-8014 DISCOUNT ON DEBT	0	0	0	0	0		
TOTAL MISCELLANEOUS	0	0	0	0	0		
TOTAL DISCOUNT ON BONDS ISSUED	0	0	0	0	0		

931-PORT BONDS

DEPARTMENTAL EXPENDITURES	2019 ACTUAL	2020 ORIGINAL	2020 AMENDED	2021 DEPARTMENT REQUESTED	2021 RECOMMENDED BUDGET	2021 PROPOSED BUDGET	2021 ADOPTED BUDGET
RESERVED USES(BDGT ONLY)							
MISCELLANEOUS							
931-49990-8100 RESERVED USES-BUDGET ONLY	0	0	0	0	0		
TOTAL MISCELLANEOUS	0	0	0	0	0		
TOTAL RESERVED USES(BDGT ONLY)	0	0	0	0	0		
TOTAL EXPENDITURES	289,975	288,850	288,850	0	0		
REVENUE OVER/(UNDER) EXPENDITURES	6,036	0	0	0	0		

*** END OF REPORT ***

936-PT-2013 IMPROVEMENTS BOND

REVENUES	2019 ACTUAL	2020 ORIGINAL	2020 AMENDED	2021 DEPARTMENT REQUESTED	2021 RECOMMENDED BUDGET	2021 PROPOSED BUDGET	2021 ADOPTED BUDGET
TAXES							
GENERAL PROPERTY TAXES							
936-31110 CURRENT AD VALOREM TAXES	125,451	131,800	131,800	134,760	134,760		
PROPERTY TAXES 2013A BOND	0	0.00	134,760.00				
936-31120 DELINQUENT AD VALOREM TAXES	1,898	0	0	0	0		
TOTAL GENERAL PROPERTY TAXES	127,349	131,800	131,800	134,760	134,760		
TOTAL TAXES	127,349	131,800	131,800	134,760	134,760		
INTERGOVERNMENTAL REV							
STATE GRANTS & AIDS							
936-33402 MARKET VALUE CREDITS	24	0	0	0	0		
TOTAL STATE GRANTS & AIDS	24	0	0	0	0		
TOTAL INTERGOVERNMENTAL REV	24	0	0	0	0		
MISCELLANEOUS REVENUE							
INVESTMENT EARNINGS							
936-36101 INTEREST REVENUES	1,146	500	500	100	100		
EST INTEREST REVENUE	0	0.00	100.00				
TOTAL INVESTMENT EARNINGS	1,146	500	500	100	100		
TOTAL MISCELLANEOUS REVENUE	1,146	500	500	100	100		
TOTAL REVENUES	128,519	132,300	132,300	134,860	134,860		

936-PT-2013 IMPROVEMENTS BOND

REVENUES	2019 ACTUAL	2020 ORIGINAL	2020 AMENDED	2021 DEPARTMENT REQUESTED	2021 RECOMMENDED BUDGET	2021 PROPOSED BUDGET	2021 ADOPTED BUDGET
BOND PRINCIPAL							
MISCELLANEOUS							
936-47110-8011 PRINCIPAL	0	0	0	0	0		
TOTAL MISCELLANEOUS	0	0	0	0	0		
TOTAL BOND PRINCIPAL	0	0	0	0	0		
INTEREST - BOND							
MISCELLANEOUS							
936-47210-8012 INTEREST	0	0	0	0	0		
TOTAL MISCELLANEOUS	0	0	0	0	0		
TOTAL INTEREST - BOND	0	0	0	0	0		
FISCAL AGENT'S FEES							
MISCELLANEOUS							
936-47500-8019 DEBT SERVICE-OTHER	0	0	0	0	0		
TOTAL MISCELLANEOUS	0	0	0	0	0		
TOTAL FISCAL AGENT'S FEES	0	0	0	0	0		
TRANSFERS OUT							
MISCELLANEOUS							
936-49109-8029 TRANSFERS-OUT	127,350	132,300	132,300	134,860	134,860		
TRANSFER OUT 419 AIRPORT	0	0.00	134,860.00				
TOTAL MISCELLANEOUS	127,350	132,300	132,300	134,860	134,860		
TOTAL TRANSFERS OUT	127,350	132,300	132,300	134,860	134,860		

936-PT-2013 IMPROVEMENTS BOND

DEPARTMENTAL EXPENDITURES	2019 ACTUAL	2020 ORIGINAL	2020 AMENDED	2021 DEPARTMENT REQUESTED	2021 RECOMMENDED BUDGET	2021 PROPOSED BUDGET	2021 ADOPTED BUDGET
RESERVED USES - BUDGET							
MISCELLANEOUS							
936-49990-8100 RESERVED USES-BUDGET	0	0	0	0	0		
TOTAL MISCELLANEOUS	0	0	0	0	0		
TOTAL RESERVED USES - BUDGET	0	0	0	0	0		
TOTAL EXPENDITURES	127,350	132,300	132,300	134,860	134,860		
REVENUE OVER/(UNDER) EXPENDITURES	1,169	0	0	0	0		

*** END OF REPORT ***

945-COMMERCIAL HARBOR

REVENUES	2019 ACTUAL	2020 ORIGINAL	2020 AMENDED	2021 DEPARTMENT REQUESTED	2021 RECOMMENDED BUDGET	2021 PROPOSED BUDGET	2021 ADOPTED BUDGET
INTERGOVERNMENTAL REV							
STATE GRANTS & AIDS							
945-33408 STATE GRANT/AID-RESTRICT PRG	380,995	487,500	487,500	487,500	487,500		
PORT WATERWAYS - MN DOT	0	0.00 487,500.00					
TOTAL STATE GRANTS & AIDS	380,995	487,500	487,500	487,500	487,500		
TOTAL INTERGOVERNMENTAL REV	380,995	487,500	487,500	487,500	487,500		
MISCELLANEOUS REVENUE							
INVESTMENT EARNINGS							
945-36101 INTEREST REVENUES	1,858	0	0	0	0		
TOTAL INVESTMENT EARNINGS	1,858	0	0	0	0		
CONTRIBUTION & DONATIONS							
945-36401 CONTRIB/DONATIONS-PRIVATE SR	0	0	0	0	0		
TOTAL CONTRIBUTION & DONATIONS	0	0	0	0	0		
TOTAL MISCELLANEOUS REVENUE	1,858	0	0	0	0		
OTHER FINANCING SOURCES							
INTERFUND TRANSFERS IN							
945-39109 TRANSFERS-IN FROM OTHER FUND	212,000	122,000	122,000	139,000	139,000		
TRANSFER IN FROM 911	0	0.00 139,000.00					
TOTAL INTERFUND TRANSFERS IN	212,000	122,000	122,000	139,000	139,000		
RESERVED SOURCES							
945-39810 RESERVED SOURCES (BUDGET ONL	0	0	0	0	0		
TOTAL RESERVED SOURCES	0	0	0	0	0		
TOTAL OTHER FINANCING SOURCES	212,000	122,000	122,000	139,000	139,000		
TOTAL REVENUES	594,853	609,500	609,500	626,500	626,500		

945-COMMERCIAL HARBOR

REVENUES	2019 ACTUAL	2020 ORIGINAL	2020 AMENDED	2021 DEPARTMENT REQUESTED	2021 RECOMMENDED BUDGET	2021 PROPOSED BUDGET	2021 ADOPTED BUDGET
ECONOMIC DEVELOPMENT							
PROPERTY SERVICES							
945-46511-4509 CONSTRUCTION SERVICES-OTH	49,000	0	0	0	0		
TOTAL PROPERTY SERVICES	49,000	0	0	0	0		
PROPERTY							
945-46511-7309 IMPROVEMENTS OTHER THAN B	584,250	609,500	703,150	626,500	626,500		
COM.HARBOR IMPROVEMENTS	0	0.00 626,500.00					
TOTAL PROPERTY	584,250	609,500	703,150	626,500	626,500		
TOTAL ECONOMIC DEVELOPMENT	633,250	609,500	703,150	626,500	626,500		
OTHER INTERFD TRANS OUT							
MISCELLANEOUS							
945-49109-8029 TRANSFERS OUT	0	0	0	0	0		
TOTAL MISCELLANEOUS	0	0	0	0	0		
TOTAL OTHER INTERFD TRANS OUT	0	0	0	0	0		
RES. USES-BUDGET ONLY							
MISCELLANEOUS							
945-49990-8100 RESERVED USES-BUDGET ONLY	0	0	0	0	0		
TOTAL MISCELLANEOUS	0	0	0	0	0		
TOTAL RES. USES-BUDGET ONLY	0	0	0	0	0		
TOTAL EXPENDITURES	633,250	609,500	703,150	626,500	626,500		
REVENUE OVER/(UNDER) EXPENDITURES	(38,397)	0	(93,650)	0	0		

*** END OF REPORT ***

946-RIVERBEND BROWNFIELDS

REVENUES	2019 ACTUAL	2020 ORIGINAL	2020 AMENDED	2021 DEPARTMENT REQUESTED	2021 RECOMMENDED BUDGET	2021 PROPOSED BUDGET	2021 ADOPTED BUDGET
INTERGOVERNMENTAL REV							
STATE GRANTS & AIDS							
946-33408 STATE GRANT/AID-RESTRICT PRG	170,253	50,000	50,000	50,000	50,000		
STATE GRANT	0	0.00	50,000.00				
TOTAL STATE GRANTS & AIDS	170,253	50,000	50,000	50,000	50,000		
TOTAL INTERGOVERNMENTAL REV	170,253	50,000	50,000	50,000	50,000		
MISCELLANEOUS REVENUE							
INVESTMENT EARNINGS							
946-36101 INTEREST REVENUES	1,810	0	0	0	0		
TOTAL INVESTMENT EARNINGS	1,810	0	0	0	0		
MISCELLANEOUS REVENUES							
946-36329 REFUNDS/REIMBURSEMENTS-OTHER	0	0	0	0	0		
TOTAL MISCELLANEOUS REVENUES	0	0	0	0	0		
TOTAL MISCELLANEOUS REVENUE	1,810	0	0	0	0		
OTHER FINANCING SOURCES							
INTERFUND TRANSFERS IN							
946-39109 TRANSFERS IN FROM OTHER FDS	0	0	0	5,000	5,000		
TRANSFER IN FROM FUND 911	0	0.00	5,000.00				
TOTAL INTERFUND TRANSFERS IN	0	0	0	5,000	5,000		
TOTAL OTHER FINANCING SOURCES	0	0	0	5,000	5,000		
TOTAL REVENUES	172,063	50,000	50,000	55,000	55,000		

946-RIVERBEND BROWNFIELDS

REVENUES	2019 ACTUAL	2020 ORIGINAL	2020 AMENDED	2021 DEPARTMENT REQUESTED	2021 RECOMMENDED BUDGET	2021 PROPOSED BUDGET	2021 ADOPTED BUDGET
REHABILITATION PROJECTS							
PROFESSIONAL SERVICES							
946-46323-3303 ENGINEERING SERVICES	10,930	50,000	50,000	20,000	20,000		
ENGINEERING SERVICES	0	0.00	20,000.00				
TOTAL PROFESSIONAL SERVICES	10,930	50,000	50,000	20,000	20,000		
PROPERTY SERVICES							
946-46323-4509 CONSTRUCTION SERVICES-OTH	137,420	0	0	0	0		
TOTAL PROPERTY SERVICES	137,420	0	0	0	0		
PROPERTY							
946-46323-7309 IMPROVEMENTS OTHER THAN B	0	0	0	35,000	35,000		
IMPROVEMENTS OTHER THAN BLDG	0	0.00	35,000.00				
TOTAL PROPERTY	0	0	0	35,000	35,000		
TOTAL REHABILITATION PROJECTS	148,350	50,000	50,000	55,000	55,000		
TOTAL EXPENDITURES	148,350	50,000	50,000	55,000	55,000		
REVENUE OVER/(UNDER) EXPENDITURES	23,713	0	0	0	0		

*** END OF REPORT ***

948-1321 INNOVTN DR TIF 3

REVENUES	2019 ACTUAL	2020 ORIGINAL	2020 AMENDED	2021 DEPARTMENT REQUESTED	2021 RECOMMENDED BUDGET	2021 PROPOSED BUDGET	2021 ADOPTED BUDGET
TAXES							
GENERAL PROPERTY TAXES							
948-31140 TAX INCREMENTS	111,623	110,000	110,000	114,000	114,000		
TAX INCREMENT - WINCRAFT	0	0.00	114,000.00				
TOTAL GENERAL PROPERTY TAXES	111,623	110,000	110,000	114,000	114,000		
TOTAL TAXES	111,623	110,000	110,000	114,000	114,000		
TOTAL REVENUES	111,623	110,000	110,000	114,000	114,000		

948-1321 INNOVTN DR TIF 3

REVENUES	2019 ACTUAL	2020 ORIGINAL	2020 AMENDED	2021 DEPARTMENT REQUESTED	2021 RECOMMENDED BUDGET	2021 PROPOSED BUDGET	2021 ADOPTED BUDGET
ECONOMIC DEVELOPMENT							
OTHER PURCHASED SERVICES							
948-46511-5909 PURCHASED SERVICES-OTHER	100,461	110,000	110,000	114,000	114,000		
OTHER PURCHASED SERV.WINCRAFT	0	0.00	114,000.00				
TOTAL OTHER PURCHASED SERVICES	100,461	110,000	110,000	114,000	114,000		
TOTAL ECONOMIC DEVELOPMENT	100,461	110,000	110,000	114,000	114,000		
OTHER INTRFND TRANSF OUT							
MISCELLANEOUS							
948-49109-8029 TRANSFERS-OUT	11,162	0	0	0	0		
TOTAL MISCELLANEOUS	11,162	0	0	0	0		
TOTAL OTHER INTRFND TRANSF OUT	11,162	0	0	0	0		
TOTAL EXPENDITURES	111,623	110,000	110,000	114,000	114,000		
REVENUE OVER/(UNDER) EXPENDITURES	0	0	0	0	0		

*** END OF REPORT ***

949-102 WALNUT TIF 4

REVENUES	2019 ACTUAL	2020 ORIGINAL	2020 AMENDED	2021 DEPARTMENT REQUESTED	2021 RECOMMENDED BUDGET	2021 PROPOSED BUDGET	2021 ADOPTED BUDGET
TAXES							
GENERAL PROPERTY TAXES							
949-31140 TAX INCREMENTS	0	15,000	15,000	15,000	15,000		
TAX INCREMENT - 102 WALNUT	0	0.00	15,000.00				
TOTAL GENERAL PROPERTY TAXES	0	15,000	15,000	15,000	15,000		
TOTAL TAXES	0	15,000	15,000	15,000	15,000		
TOTAL REVENUES	0	15,000	15,000	15,000	15,000		

949-102 WALNUT TIF 4

REVENUES	2019 ACTUAL	2020 ORIGINAL	2020 AMENDED	2021 DEPARTMENT REQUESTED	2021 RECOMMENDED BUDGET	2021 PROPOSED BUDGET	2021 ADOPTED BUDGET
ECONOMIC DEVELOPMENT							
OTHER PURCHASED SERVICES							
949-46511-5909 PURCHASED SERVICES-OTHER	0	15,000	15,000	15,000	15,000		
OTHER PURCHASED SERV-102WALNUT	0	0.00	15,000.00				
TOTAL OTHER PURCHASED SERVICES	0	15,000	15,000	15,000	15,000		
TOTAL ECONOMIC DEVELOPMENT	0	15,000	15,000	15,000	15,000		
OTHER INTRFND TRANSF OUT							
MISCELLANEOUS							
949-49109-8029 TRANSFERS-OUT	0	0	0	0	0		
TOTAL MISCELLANEOUS	0	0	0	0	0		
TOTAL OTHER INTRFND TRANSF OUT	0	0	0	0	0		
TOTAL EXPENDITURES	0	15,000	15,000	15,000	15,000		
REVENUE OVER/(UNDER) EXPENDITURES	0	0	0	0	0		

*** END OF REPORT ***

950-956 MANKATO TIF 5

REVENUES	2019 ACTUAL	2020 ORIGINAL	2020 AMENDED	2021 DEPARTMENT REQUESTED	2021 RECOMMENDED BUDGET	2021 PROPOSED BUDGET	2021 ADOPTED BUDGET
TAXES							
GENERAL PROPERTY TAXES							
950-31140 TAX INCREMENTS	0	20,000	20,000	70,000	70,000		
TAX INCREMENT - 956 MANKATO	0	0.00	70,000.00				
TOTAL GENERAL PROPERTY TAXES	0	20,000	20,000	70,000	70,000		
TOTAL TAXES	0	20,000	20,000	70,000	70,000		
TOTAL REVENUES	0	20,000	20,000	70,000	70,000		

950-956 MANKATO TIF 5

REVENUES	2019 ACTUAL	2020 ORIGINAL	2020 AMENDED	2021 DEPARTMENT REQUESTED	2021 RECOMMENDED BUDGET	2021 PROPOSED BUDGET	2021 ADOPTED BUDGET
ECONOMIC DEVELOPMENT							
OTHER PURCHASED SERVICES							
950-46511-5909 PURCHASED SERVICES-OTHER	0	20,000	20,000	70,000	70,000		
OTHER PURCHASED SRV-956MANKATO	0	0.00	70,000.00				
TOTAL OTHER PURCHASED SERVICES	0	20,000	20,000	70,000	70,000		
TOTAL ECONOMIC DEVELOPMENT	0	20,000	20,000	70,000	70,000		
OTHER INTRFND TRANSF OUT							
MISCELLANEOUS							
950-49109-8029 TRANSFERS-OUT	0	0	0	0	0		
TOTAL MISCELLANEOUS	0	0	0	0	0		
TOTAL OTHER INTRFND TRANSF OUT	0	0	0	0	0		
TOTAL EXPENDITURES	0	20,000	20,000	70,000	70,000		
REVENUE OVER/(UNDER) EXPENDITURES	0	0	0	0	0		

*** END OF REPORT ***

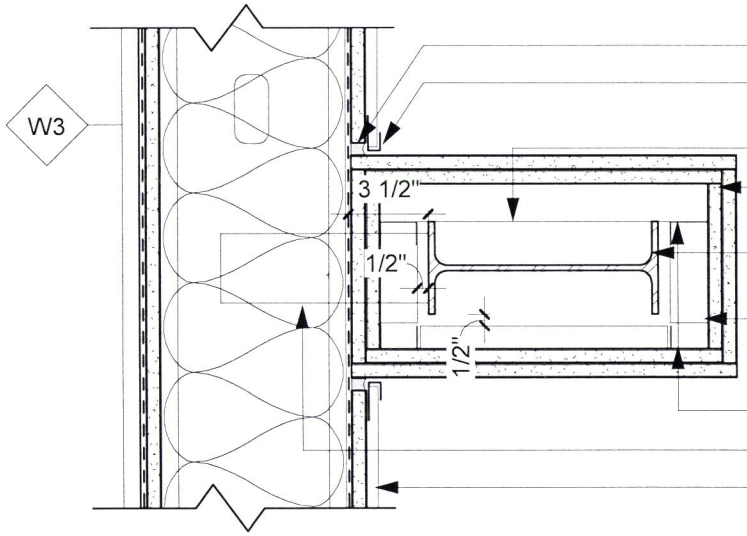

FIRE CAULK AT EDGES OF GYP. BD., TYP.

PREFIN. METAL EDGE TRIM W/ HEMMED EDGE RE: METAL BUILDING MANUF.

1-5/8" X 1" GALV. MTL. RUNNER @24" O.C.

2 LAYERS 5/8" TYPE 'X' GYPSUM BOARD AROUND ALL FACES OF BEAM CAGE

SPANDREL BEAM RE: METAL BUILDING MANUF., INSET BEAM 3-1/2" FROM INNER F.O. STUDS

1-5/8" X 1" GALV. MTL. RUNNER @24" O.C., COPE AT CORNERS TO FORM CONT. U-BRACKET AND TO ACCOMMODATE RUNNER SET IN EA. CORNER

1-5/8" X 1" GALV. MTL. RUNNER CONT. AT CORNERS, TYP.

STUD CLIP AT EA. STUD, ATTACH TO BEAM

PREFIN. METAL WALL LINER PANEL RE: METAL BUILDING MANUF.

2-HR FIRE RATED ASSEMBLY FOR WEB OR FLANGE OF STEEL BEAMS AND GIRDERS PER 2020 MINNESOTA STATE BUILDING CODE TABLE 721.1(1); LISTING 2-4.1

4

Spandrel Beam Fire Protection Detail

1 1/2" = 1'-0"

2

A

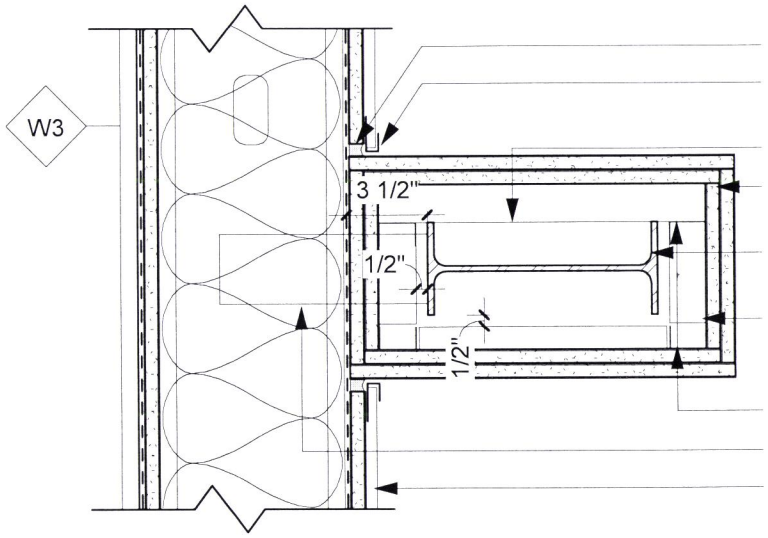

FIRE CAULK AT EDGES OF GYP. BD., TYP.

PREFIN. METAL EDGE TRIM W/ HEMMED EDGE RE: METAL BUILDING MANUF.

1-5/8" X 1" GALV. MTL. RUNNER @24" O.C.

2 LAYERS 5/8" TYPE 'X' GYPSUM BOARD AROUND ALL FACES OF BEAM CAGE

SPANDREL BEAM RE: METAL BUILDING MANUF., INSET BEAM 3-1/2" FROM INNER F.O. STUDS

1-5/8" X 1" GALV. MTL. RUNNER @24" O.C., COPE AT CORNERS TO FORM CONT. U-BRACKET AND TO ACCOMMODATE RUNNER SET IN EA. CORNER

1-5/8" X 1" GALV. MTL. RUNNER CONT. AT CORNERS, TYP.

STUD CLIP AT EA. STUD, ATTACH TO BEAM

PREFIN. METAL WALL LINER PANEL RE: METAL BUILDING MANUF.

2-HR FIRE RATED ASSEMBLY FOR WEB OR FLANGE OF STEEL BEAMS AND GIRDERS PER 2020 MINNESOTA STATE BUILDING CODE TABLE 721.1(1); LISTING 2-4.1

4 Spandrel Beam Fire Protection Detail

1 1/2" = 1'-0"

2

A

FLAHERTY | HOOD P.A.

June 8, 2020

Lucy McMartin
Port Authority of Winona
207 Lafayette
PO Box 378
Winona, MN 55987

VIA EMAIL ONLY

Re: Port Authority of Winona Legal Services

Dear Lucy:

Please find attached hereto Flaherty & Hood, P.A.'s hourly rate schedule, Exhibit A, for providing legal services to the Port Authority of Winona (the "Port") for calendar year 2021. The attached rate schedule is effective January 1, 2021.

We have very much appreciated the opportunity to work with you and the Port over the past year and look forward to continuing to provide legal services to the Port in the upcoming year.

Should you have any questions or require additional information, please do not hesitate to contact me at (651) 225-8840 or via email at cmhood@flaherty-hood.com. Thank you.

Very truly yours,

FLAHERTY & HOOD, P.A.

Chris Hood

Christopher M. Hood

CMH/kp

FLAHERTY & HOOD, P.A.

2021 HOURLY RATE SCHEDULE

HOURLY FEES		**2021**
General Municipal Matters[1] Represent the Port in all civil legal matters not otherwise categorized as Employment, Environment[2], Real Estate or Litigation matters.	**Attorneys**	**$150/hr.**
	Other Legal	**$75/hr.**
Employment and Real Estate Advise and represent the Port in employment and real estate matters.	**Attorneys**	**$155/hr.**
	Other Legal	**$80/hr.**
Litigation Matters Advise and represent the Port in all contested matters, where no insurance coverage is otherwise available, including but not limited to: state or federal district court or appellate civil litigation; mediation; arbitration; eminent domain; administrative proceedings before state or federal agencies; and like proceedings.	**Attorneys**	**$170/hr.**
	Other Legal	**$90/hr.**
Minimum Increment of Time Billed for Services		**15 min.**

[1] For 2021, because the City of Winona is a Coalition of Greater Minnesota Cities (CGMC) member, the Port will be billed at the lower governmental rates for CGMC cities.

[2] Rates for environmental matters will be negotiated on a per case basis.